Metis

Metis LITE /LAB /SCAN/ INLINE

Metis LITE /LAB /SCAN /INLINE: Spectral Offline and Inline Measuring System, using Integrating Sphere, for coatings on foils/WEB and on large size glasses

To ensure the highest quality of your product it is very important to control the thin film deposition process and measure the optical properties of the thin films, inline during or offline after the coating process.
No matter, if the coating process is a vacuum coating process, like CVD, PECVD, MOCVD, ALD, PVD, or if it is a wet coating process like spray coating, doctor blade, slit coating,…, the Metis is suited for controlling your coatings.
Process parameters such as temperatures, pressures, surface tensions, transportation speed and material properties have strong influence on the optical parameters of the thin films and the product quality. They need to be controlled and optimized.

Example: Metis SCAN

Coating control on foils/WEB and on large size glasses

The Metis measurement heads have an awesome tolerance for sample distance variation and sample tilt. Therefore it is the perfect solution for R2R WEB applications, where a fast moving foil might vibrate and where the samples might have waviness.
Also it is the perfect solution for coatings on large size glasses, for example architectural glass or ITO-glass, which are transported on vertical or horizontal conveyers with quite high positioning tolerance, either due to the transporation mechanism or simply due to bending.
The Metis Reflectance and Transmittance measurement heads are compact measuring heads, including all optics and electronics in the heads. This allows to scan the samples with movable measuring heads, without losing measuring accuracy. An additional spectrometer for simultaneously controlling the light source is integrated.

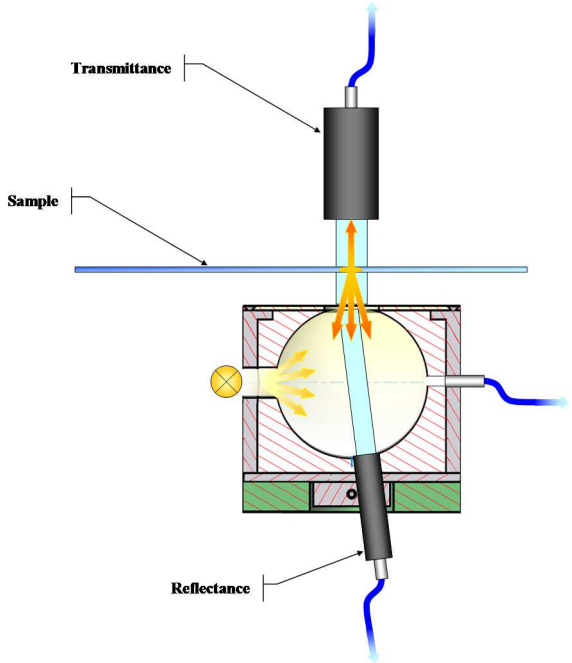

Schematic layout of the optical measurement setup

Measured Parameters

To increase production yield and production quality, it is essential to gain direct detailed knowledge about:

- Spectral Reflectance, Transmittance, Absorbance
- Color_R and Color_T
- Thickness of thin layers and layer stacks
- Spectral optical constants n&k
- Optionally an optical modelling tool for designing of own parameter sets for n&k-measurement, is available

Highlights of the Metis System:

- **Using integrating sphere with integrated light source**
  - Spectral range 380 - 1070nm
    360 - 970nm (option)
    850 -1700nm (option)
- **High photometric accuracy**
  - Spectra: < 0,4% (400nm - 1000nm)
  - Long-term stability by internal correction channel
  - Precise color measurement
- **Awesome tolerance for sample distance variation and sample tilt**
  - ±5 mm distance variation
  - ±2° tilt variation
  - Allows measurement on slightly bowed samples
- **Modular Employable**
  - LITE (Fixed Sample table)
  - LAB (Manual operated Sample table)
  - SCAN (Automatic Mapping table)
  - INLINE (fixed or motorized scanning)
- **High measuring rate**
  - < 0.1 sec/point (spectra acquisition)
- **Wide range thickness measurement**
  - 5nm - 20µm
  - Single layers and layer stacks
  - Measurement of optical constants n&k

Principle of spectral thickness Measurement

Phase differences between the front and rear side reflection of thin layers cause interference. Absorption inside each layer changes light wave amplitude. Both of these phenomenona can be used together to measure the layer thickness and the spectral refractive and absorption index n&k of thin layers.

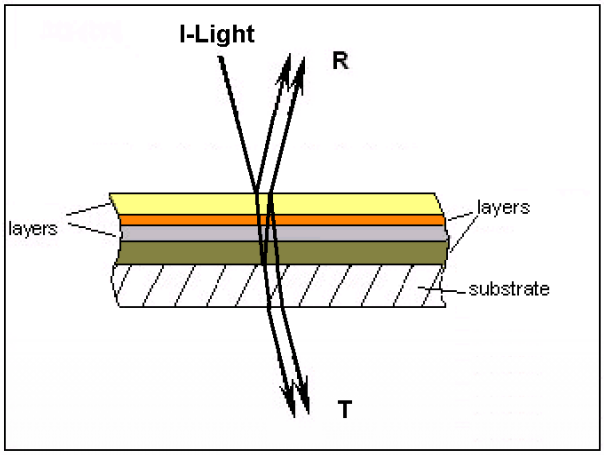

Reflectance R and transmittance T at a layer stack

After recording the specta of the sample, an automized mathematical calculation is performed in which the layer thicknesses and the parameters for the optical properties n&k are varied until model and measurement match perfectly.

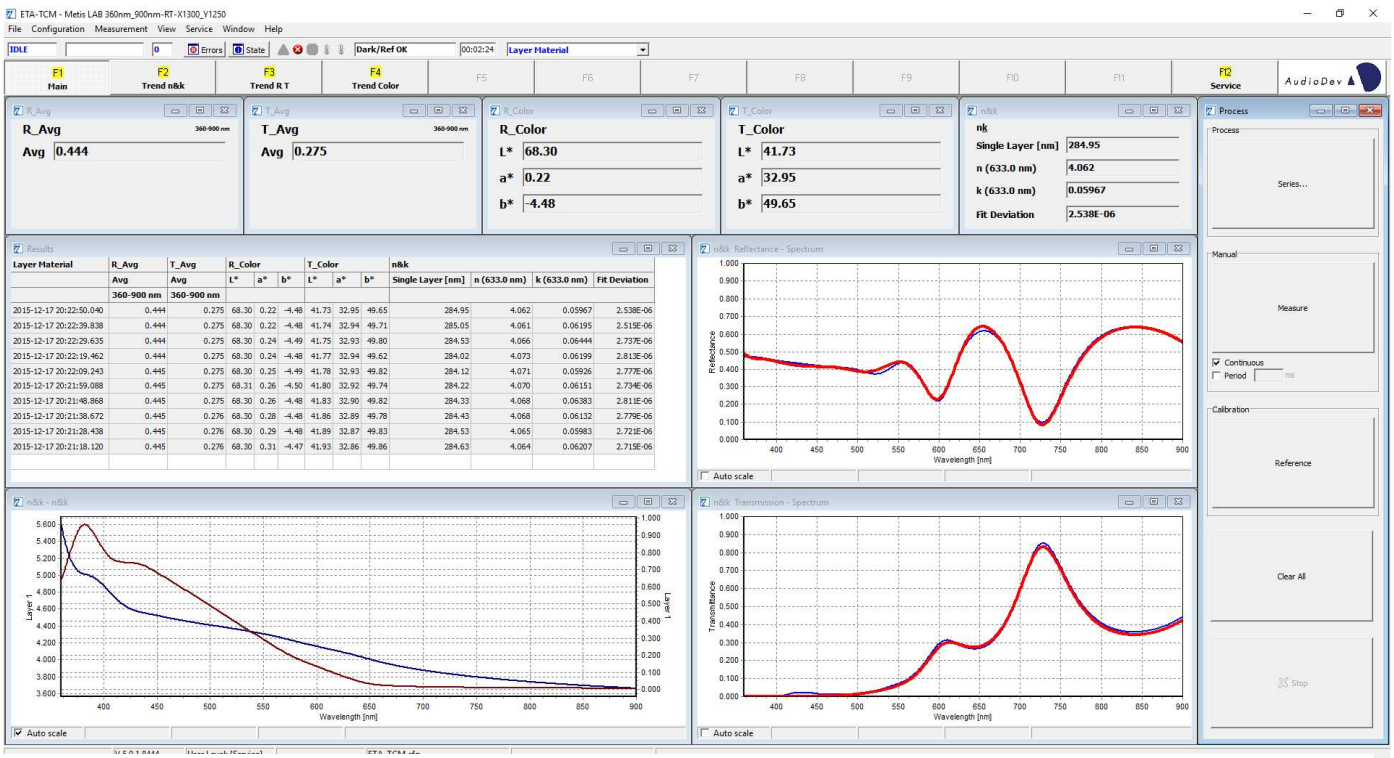

Spectral fit of R and T of an amorphous silicon coating on a glass substrate in the spectral range 360nm-900nm
n&k-spectra on the left side: n-spectrum= blue, k-spectrum = red
R&T Spectra on the right side: measurement = blue / model simulation = red,
Measured Parameters: R&T, R-color, T-color, layer thickness, spectral n&k

Product Specifications for Metis

Metis LITE /LAB /SCAN/ INLINE

Measurement	
Measurement parameters	Spectral Reflectance Spectral Transmittance Color-R Color-T Layer thicknesses of single layers and stacks Optical Constants n&k (spectral refractive index and absorption coefficient)
Spectral Measurement	
Wavelength range (λ-range)	VIS: 380nm - 1050nm VIS_ext: 360nm – 970nm (optional) NIR: 850nm - 1700nm (optional)
R&T Accuracy	± 0.4% (for λ > 400nm)
Thickness Measurement of thick layers	
Thickness range for thick layers (FFT method) Thickness accuracy Thickness repeatability Maximum no. of layers	1µm - 25µm ± 0.05µm 3σ < 0.005µm 2
Thickness Measurement of thin layers	
Thickness range for thin layers (fit method) Thickness accuracy Thickness repeatability Maximum no. of layers	5nm - 3000nm ± 0.5nm (range 5nm-40nm) ± 1.0nm (range 40nm-200nm) ± 2.0nm (range 200nm-3000nm) 3σ < 0.1nm (range 5nm - 200nm) 3σ < 0.5nm (range 200nm - 1000nm) 3σ < 1.0nm (range 1000nm - 3000nm) 3
Refractive index Measurement	
Refractive index accuracy Refractive index repeatability	Silicon-layers : ± 0.03 ; Conductive layers : ± 0.03 ; Dielectric layers : ±0.02 ; Others ± 0.03 3σ < 0.01
Color Measurement (Reflectance and Transmittance)	
Chromaticity accuracy (xyY)	x,y 3σ < 0.002 Y 3σ < 0.5
Chromaticity repeatability	x,y 3σ < 0.001 Y 3σ < 0.1
Measurement geometry	White light Reflectance (R) with d/8° and Transmittance (T) with 8° angle
Measurement spot size	ca. 5mm diameter
Measurement speed (spectra acquisition)	< 100ms
Required Positioning Accuracy of sample	± 6mm in height and ±2° in Tilt
Evaluation speed thin film measurement	1 layer thickness < 0,2s 2 layer thickness < 1s 3 layer thickness < 5s n&k-evalution < 10s
Light Source	Halogen, 20W, > 2000h lifetime, 3000K color temperature Option: UV-extension 365nm and 395nm for 360nm-970nm spectrometers
Spectrometer (VIS)	512 pixel Silicon diode line detector, 380nm-1070nm spectral range, 16 bit digitalization, Transmittance holographic grating, LAN-Interface
Option: Spectrometer (VIS_extended)	512 pixel Silicon diode line detector, 360nm-970nm spectral range, 16 bit digitalization, Transmittance holographic grating, LAN-Interface
Option: Spectrometer (NIR)	256 pixel InGaAs diode line detector, 850nm-1700nm spectral range, 16 bit digitalization, Transmittance holographic grating, LAN-Interface
Option: PC	Windows® 7 / 8 / 10, i7, 8 GB RAM, >500 GB HDD
Further specifications, like the size of sample table, type of sample table, motorization etc., depend on the model of the Metis system	

GERMANY +49 2452 96001 10 · HONG KONG +852 2314 8736 · TAIWAN +886 2 2281 0529 · USA +1 615 790 5050
www.nxt91.com sales@nxt91.com

This is NXT GmbH

NXT is a world leader in comprehensive quality assurance solutions for specialized industries. We offer high-precision analyzers, proactive customer support and training, and Test-Centers around the world.

For different industries, our ETA™, Helios and Xelas instrument families are perfect tools for protecting quality and production efficiency. With a large installed base of testers worldwide, NXT has achieved recognition as a perfect and reliable partner for optical measurements solutions.

For producers of solar cells, OLEDs, optical medias, flat panel displays, precision optics, automotive glass, consumer packaging and other thin film applications, our solutions provide comprehensive, non-destructive quality assurance that is both time- and cost-efficient.

Our headquarter is located in Heinsberg, Germany, with subsidiaries in Sweden, USA, China and Taiwan, plus a service and support network of agents worldwide. In 2016 NXT GmbH was renamed from the formerly well known AudioDev GmbH, also known as ETA-Optik GmbH before 2007.

Metis LITE/LAB/SCAN

Model: VIS - RT – X200_Y200

for thin film measurement in R&D and production

Metis LITE /LAB/SCAN, Model VIS – RT – X200_Y200

System(s): **Metis LITE / Metis LAB / Metis SCAN**
Model(s): **VIS - RT (380nm-1070nm) / VIS_ext - RT (360nm_970nm)**
Measured Parameters: **Reflectance, Transmittance, Thick layer thickness (1-25 µm), Thin layer thicknesses (5nm-3000nm), Color-R, Color-T**
Optional: Optical constants n&k
Optional: Optical modelling of coating materials

Metis system, fully integrated version, including integrated PC

- **Compact, transportable system**
  - Easy to use, for coated sheet samples and coated foils
  - 600mm x 453mm x 650mm (W x H x D)
- **Sample table versions**
  - Metis LITE: Fixed sample table, 600mmx600mm, sample needs to be placed and moved manually
  - Metis LAB: Manual sample table, 200mmx200mm movement range, larger samples up to 600mmx600mm can be placed on the table as well
  - Metis SCAN: Motorized sample table, 200mmx200mm movement range, larger samples up to 600mmx600mm can be placed on the table as well. Positioning accuracy < 0,1mm. Typical measurement speed < 0,8s/point

Scalability: larger sizes of the sample table available on request.

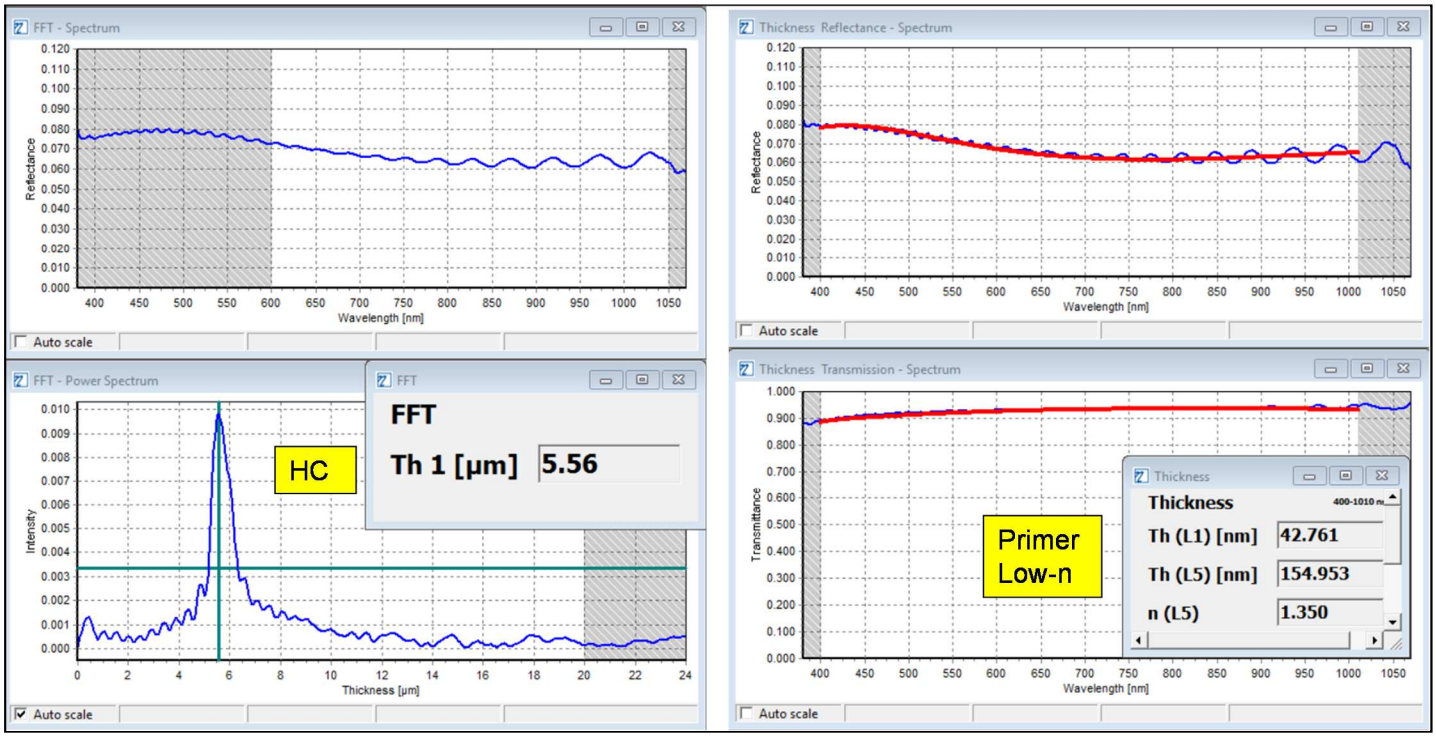

Measuring Example: Functional film for Display application , Layer stack Primer - PET_foil - Primer - HC - low_N
Measurement of the thicknesses of the back side pPrimer, the top layer Low-N and of the thick Hardcoating

Metis LAB

Model: VIS_ext - RT – X1300_Y1250

for measuring coatings on large size glasses and films
(architectural glass, flat panel display, ITO glass, ITO film ….)

Metis LAB , Model VIS_ext – RT – X1300_Y1250

System: **Metis LAB**
Model: **VIS_ext – RT – X1300_Y1250 (360nm-970nm)**
Measured Parameters: **Reflectance, Transmittance, Thick layer thickness (1-25 µm), Thin layer thicknesses (5nm-3000nm), Color-R, Color-T**
Optional: Optical constants n&k
Optional: Optical modelling of coating materials

Reflectance Measurement Head (top)
Transmittance measurement Head (bottom)

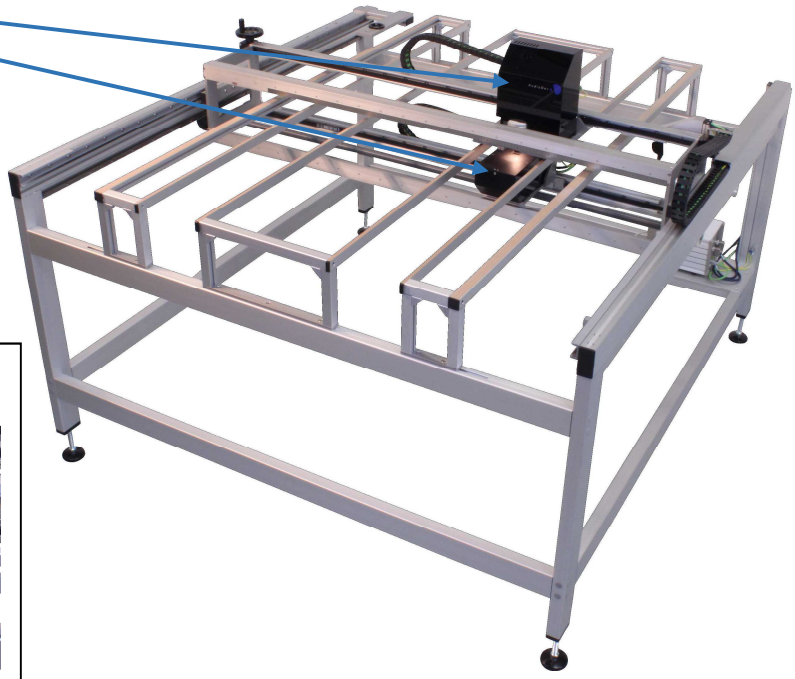

xy-movement by Handrails

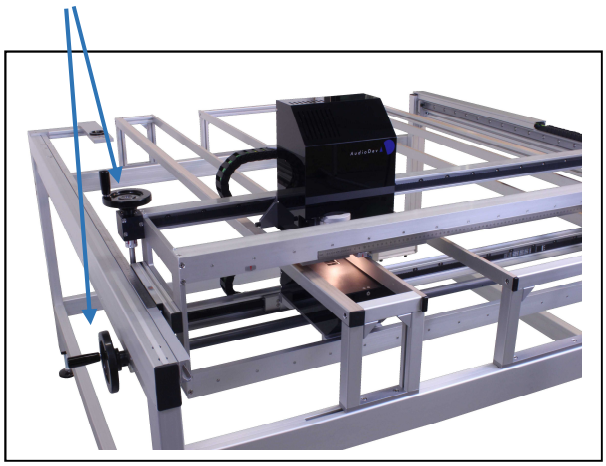

Movement range of 1300mm x 1250mm

Features of this model:

- **Sample table**
  - 1300mm x 1250mm
  - Scalability: Any other size of the sample table available on request.
  - Wide slits in the sample table for allowing placing of samples using a lift fork
  - Sample plate for the measurement of foils available on request (insertion plate with array of parallel slits or matrix of holes)
- **RT-measuring heads manually movable**
  - Scanning the sample by moving the heads instead of the sample → small footprint
  - Quick and of easy motion by handrails
  - Optionally motorized scanning versions by software controlled motors instead of handrails (Metis SCAN)

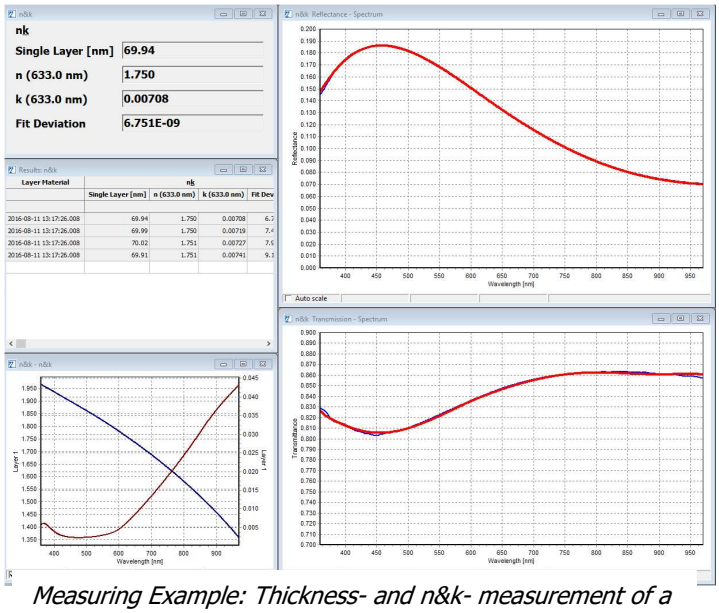

Measuring Example: Thickness- and n&k- measurement of a ca. 70nm thick ITO layer

Metis LAB

Model: VIS - RT – X550_Y670

for measuring coatings on large size glasses and films (architectural glass, flat panel display, ITO glass, ITO film ….)

Metis LAB , Model VIS – RT – X550_Y670

System: **Metis LAB**
Model: **VIS – RT – X550_Y670**
Measured Parameters: **Reflectance, Transmittance, Thick layer thickness (1-25 µm), Thin layer thicknesses (5nm-3000nm), Color-R, Color-T**
Optional: Optical constants n&k
Optional: Optical modelling of coating materials

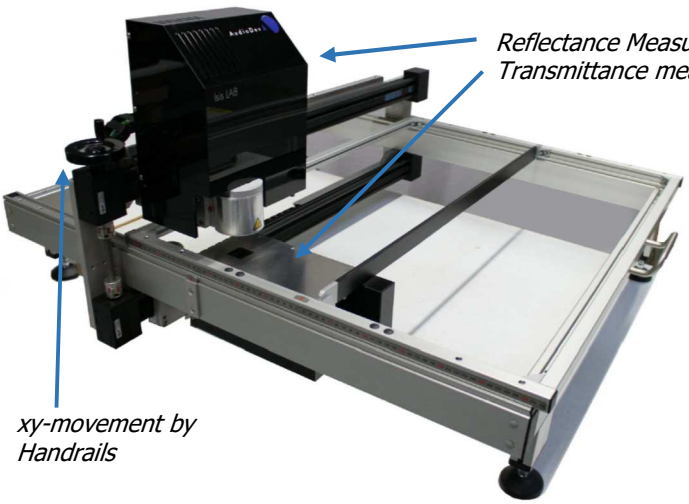

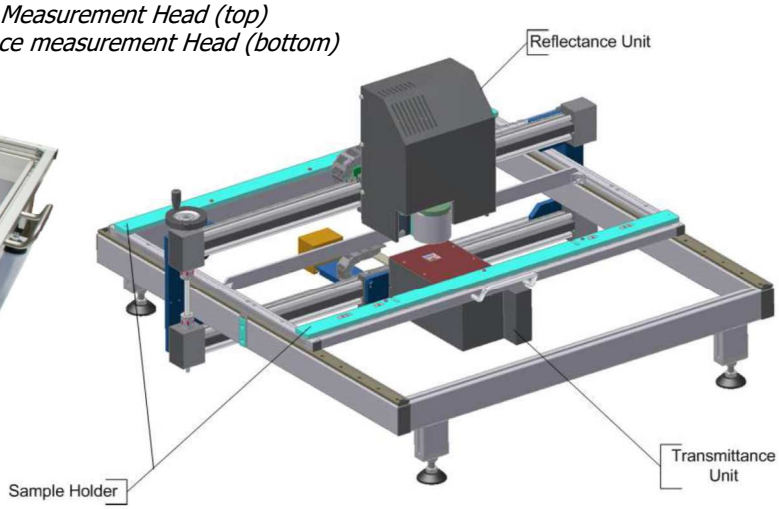

Movement range of 550mm x 670mm

Features of this model:

- **Sample table**
  - 550mm x 670mm
  - Scalability: Any other size of the sample table available on request.
  - Wide slits in the sample table for allowing placing of samples using a lift fork
  - Sample plate for the measurement of foils available on request (insertion plate with array of parallel slits or matrix of holes)
- **RT-measuring heads manually movable**
  - Scanning the sample by moving the heads instead of the sample → small footprint
  - Quick and of easy motion by handrails
  - Optionally motorized scanning versions by software controlled motors instead of handrails (Metis SCAN)

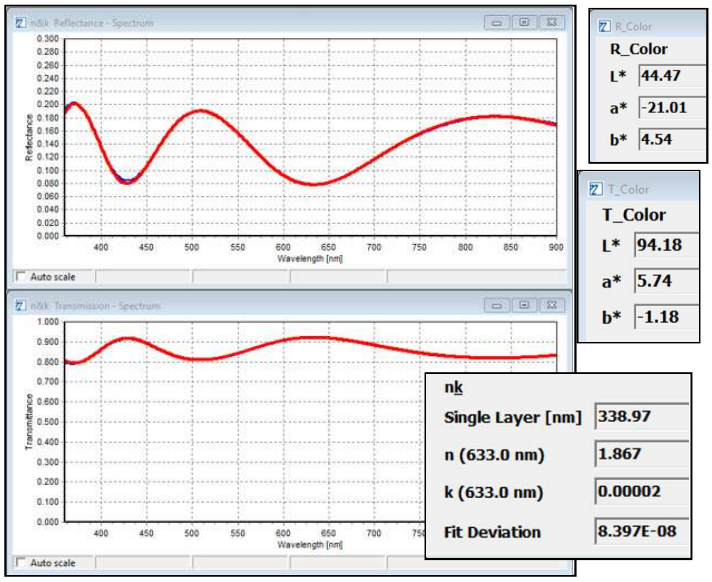

Measuring Example: Color, Thickness- and n&k- measurement of a 339nm thick Si_xN_y layer

Metis INLINE
Model: VIS – RT

for QC of coatings on films in R2R-production.

Metis INLINE , Model VIS – RT

System(s): **Metis INLINE**
Model(s): **VIS – RT / VIS_ext - RT (360nm_970nm)**
Measured Parameters: **Reflectance, Transmittance, Thick layer thickness (1-25 µm), Thin layer thicknesses (5nm-3000nm), Color-R, Color-T**
Optional: Optical constants n&k

Metis INLINE, static mounted R&T-heads

Compact Reflectance & Transmittance heads

- Easy to mount and adjust
- High photometric accuracy and long time stability
- High tolerance for sample distance variation and tilt. Allows even to measure on slightly bowed samples
- Measurement of coatings on WEB and large size sheets
  - o AR-coatings on glass
  - o Architectural glass
  - o Functional films
  - o TCO-layers
  - o Barrier layers
  - o Thin film solar
- Measurement on fast moving materials
- Various mounting possibilities due to integrated Referencing
  - o Single- and Multi-Head in fixed positions
  - o On linear rails, manually movable
  - o On motorized axis
  - o Integration in large xy-scannig tables
- Different spectral ranges available
  - o 380nm-1070nm enhanced with NUV-LED's
  - o 360nm-970nm extended with NUV-LED's
  - o 850nm-1700nm (NIR)

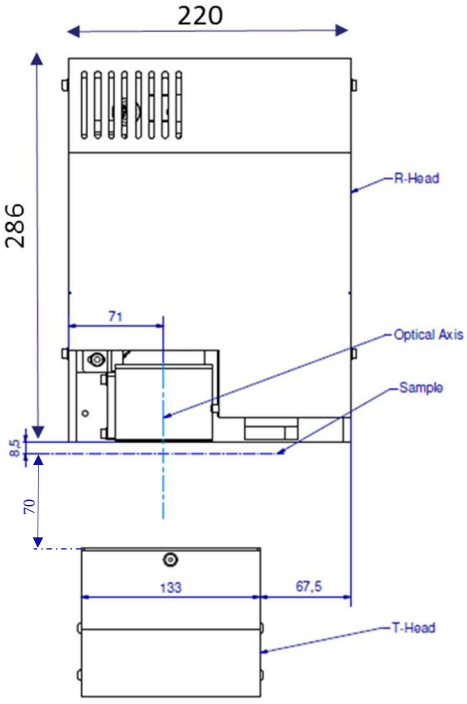

Dimensions

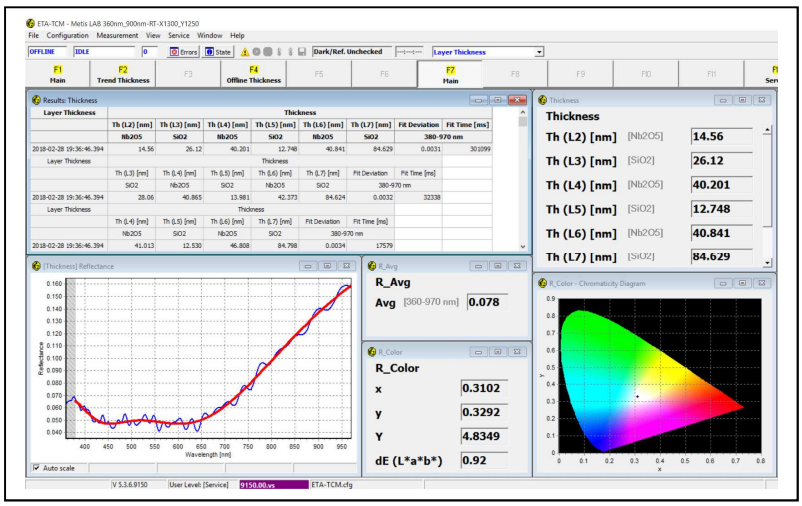

Measuring Example: 6-Layer AR-coating on glass. Color, Reflectance, Transmittance and Thickness measurement

Metis INLINE

Model: VIS - RT - X2000

for QC of coatings on films in R2R-production.
Suited for vacuum coatings and wet coating

Metis INLINE , Model VIS – RT – X2000

System: **Metis INLINE**
Model: **VIS – RT – X2000**
Measured Parameters: **Reflectance, Transmittance, Thick layer thickness (1-25 µm), Thin layer thicknesses (5nm-3000nm), Color-R, Color-T**

Software supports control of the system by machinery interface (PLC)

Movement range of 2m, other lengths up to 4m available
Cyclic automatic referencing on Reference sample, for highest long-term stability

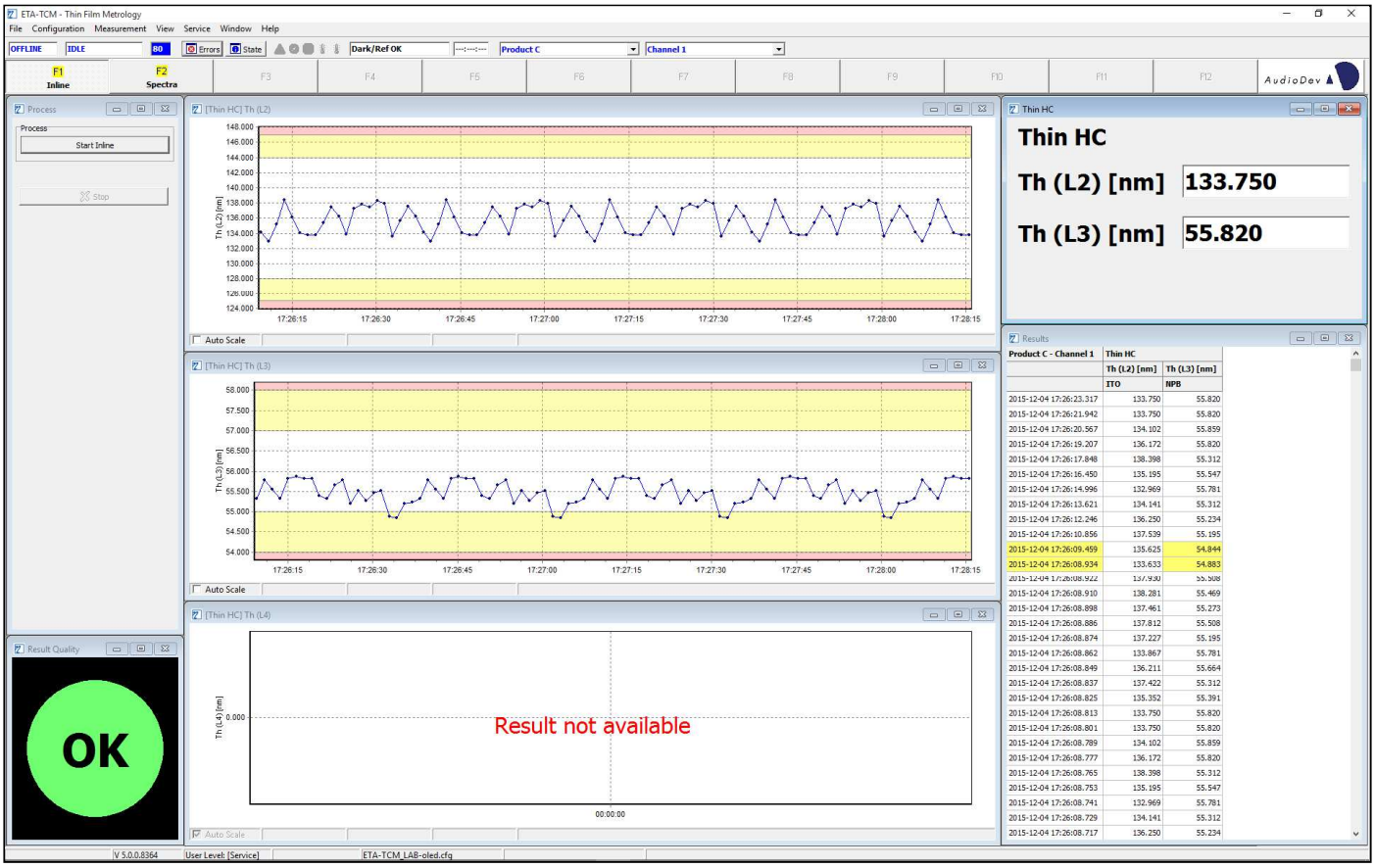

Measuring Example: Trend Display of thicknesses of dual layer vacuum coating on a foil

Metis INLINE
Model: VIS - RT - 3_ch

for QC of coatings on films in R2R-production.
Suited for vacuum coatings and wet coatings

Metis INLINE , Model VIS – RT – 3_ch

System: **Metis INLINE**
Model: **VIS – RT – 3_ch**
Measured Parameters: **Reflectance, Transmittance, Thick layer thickness (1-25 µm), Thin layer thicknesses (5nm-3000nm), Color-R, Color-T**

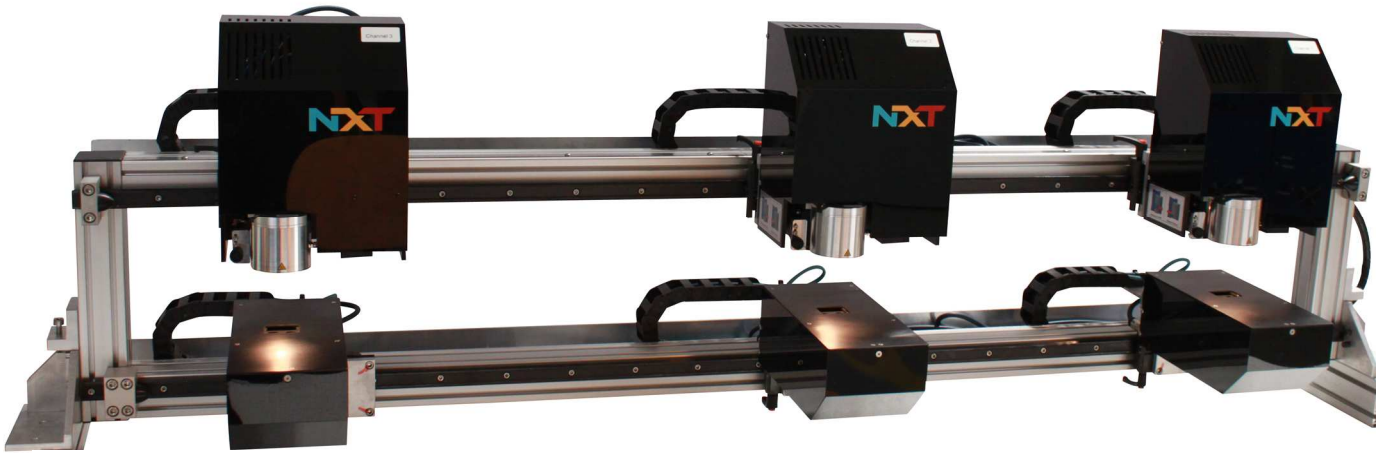

Software supports control of the system by machinery interface (PLC)

3x fixed mounted RT-measuring heads. RT-heads can be manually positioned on linear rails

Features of this model:

- Static mounted RT-measuring heads (left-center-right) for continuous montitoring of production
- Integrated automatic Referencing

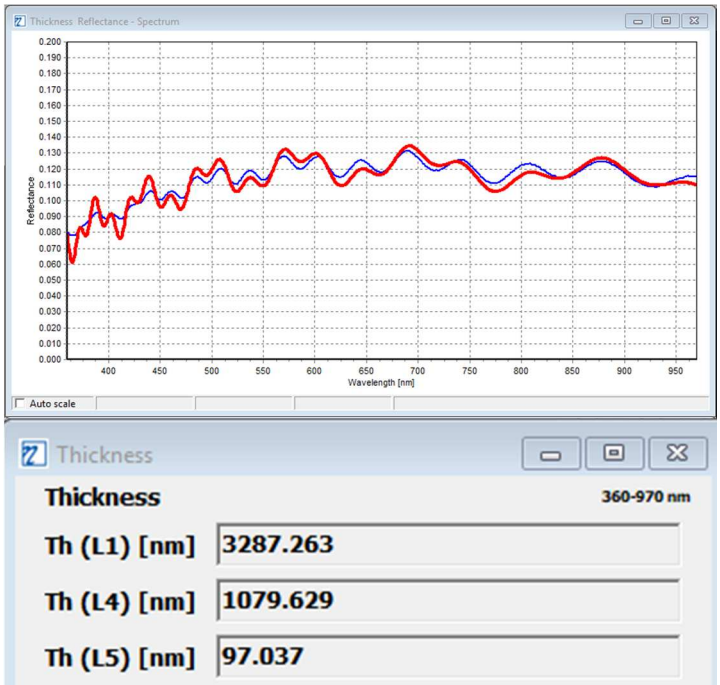

Measuring Example: 3-layer measurement by thin film fitting

- *Hard Coating 1: 3287nm*
- *Hard Coating 2: 1079nm*
- *Thin Film Coating: 97nm*

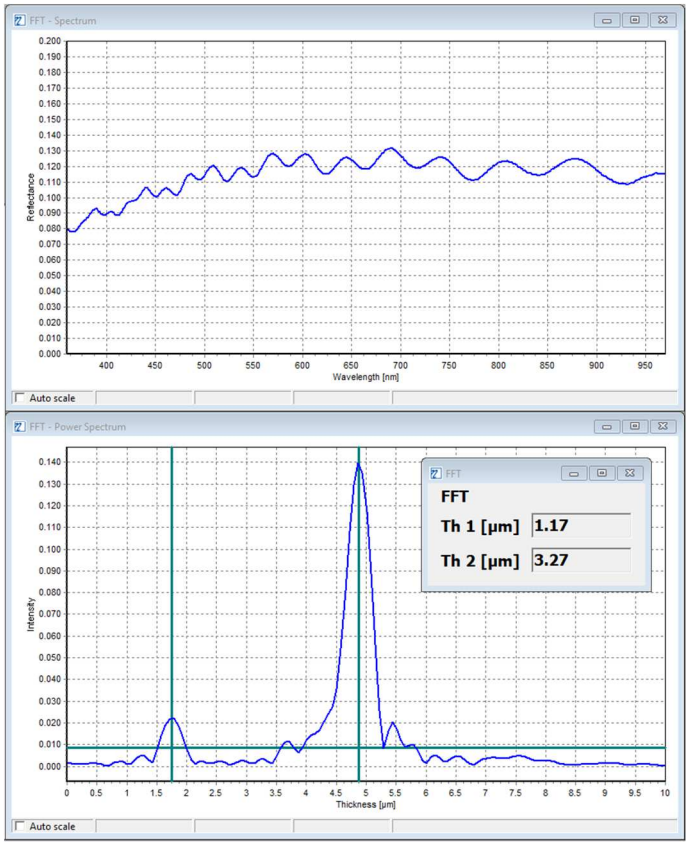

Measuring Example: 2-layer measurement by FFT-evaluation

- *Hard Coating 1: 1,17 µm*
- *Hard Coating 2: 3,27 µm*